Smart Home, Building, Hotel, Office Automation

eHouse PRO - Smart Home,

Building Automation and Management

for central Switch-Board

Catalog and Installation Documentation

Automation for:

- ✔ home
- ✔ building
- ✔ flat
- ✔ office
- ✔ hotel
- ✔ pension
- ✔ school
- ✔ sport facilities
- ✔ swimming pools
- ✔ special objects
- ✔ any other building and premises

Edit date: 2015-10-12. For most current version please check:
http://www.isys.pl/download/ehouse-pro-catalog-doc-en.pdf

eHouse Home Automation, Building Management System - Table of Contents

1. Introduction....4
1.1.eHouse system applications....4
1.2.Main features of eHouse PRO system....6
2. eHouse PRO Controller (LAN, WiFi) and accessories....7
2.1.eHouse.PRO home automation system components....8
2.2.eHouse.PRO server with eHouse Hybrid interfaces and gateways....9
2.2.1 Hardware resources of eHouse.PRO Server....9
2.3.128 intelligent outputs expansion board for eHouse.PRO PRO128OUT....12
2.4.128 intelligent inputs expansion board for eHouse.PRO PRO128IN....13
2.5.Input Expander (48) for CM for professional installation - EXP-48....14
2.6.DIN Relay Module 18 for professional installation (MP-18)....15
2.7.Central switch-board box for eHouse.PRO (128 outputs 230V/16A and 128 inputs) – SWBOX128....16
2.8.Mounted central swith-board of eHouse.PRO (128 intelligent outputs 230V/16A and 128 intelligent inputs) - EHOUSEPROSW....18
2.9."eHouse" Software Package....20
2.9.1 eHouse LAN, RS-485 windows package (for eHouse Hybrid installations)....20
2.9.2 eHouse.PRO binary Linux software package....20
2.9.3 eHouse4Apache Module....21
2.9.4 Android (Java) - Control Panel Software since 4.0.0 (eHouse4Android)....21
2.9.5 Java - PC Control Panel Software (eHouse4Java)....22
2.9.6 Windows Mobile 6.x+ .Net, .Net Compact Framework - Control Panel for devices (Mature – only for eHouse RS-485, LAN under eHouse Hybrid installation, only for development)....22
2.9.7 JavaScript script - for Web browser client side support....23
2.9.8 CorelDraw VBA script - for creating visualizations for all control panels....23
2.10.Programming libraries and code sources for development....24
3. Technical documentation of mounted eHouse.PRO central switch-board - Hardware....25
3.1.Connection of intelligent alarm inputs, sensors, switches....25
3.1.1 RJ-12 connection....25
3.1.2 Sabotage Jumpers....27
3.1.3 Sabotage selection Jumper (2*3 pin T3,T2)....27
3.1.4 IDC-50M – connection to 128 intelligent inputs module....27
4.Power supply S1 (4 pins)....28
4.1.Connection of intelligent digital outputs (On/Off)....28
5.Connection On/Off Devices/Loads to relay contacts on MP-18 relay module....29
5.1.LAN Network connection....30
5.2.GSM/SMS module connection....31

6.Ehouse Hybrid Installation – connection to other eHouse Version.....32
7.Connection Low Voltage power supply for eHouse.PRO switch-board.....34
7.1.Connection eHouse.PRO switch-board to 100..230V power supply.....35
8. Appendix.....36
8.1.Management of eHouse PRO/Hybrid system.....36
8.2.Systems and devices controlled by eHouse PRO, Hybrid.....37
8.3.Schematics of eHouse.PRO home automation switch-board.....38
8.4.Screenshots.....42
8.5.Comparison table of eHouse Versions.....43
9. Documentation / Do It Yourself – English Version.....48
10. Contact and Cooperation.....50
11. Notes:.....51

1. Introduction.

eHouse is complex solution of home automation from iSys.PL, developed since 2000. eHouse currently exists in several versions (eHouse LAN, RS-485, RF, CAN, PRO).

- ✔ Ehouse LAN, RS-485 - based on RoomManager architecture for mini switch-board in the room
- ✔ eHouse CAN/RF (wired/wireless)– for electric cans/sockets installation
- ✔ eHouse PRO for centralized installation in main switch-board

eHouse PRO building management system is designed for main switch-board (centralized installation) works directly in Local Area Network or WiFi.
Ehouse.PRO is connected to Ethernet Switch or WiFi Router.
Architecture is suitable for control whole building or single storey from single controller due to very large hardware resources (up to 256 intelligent inputs, up to 256 intelligent outputs).
Each segment can be located in professional central (main) switch-board for 230V mains installation for whole building or for each floor.
Segments are integrated each other by eHouse.PRO server software and control protocols for sending events, controllers statuses, etc.
eHouse.PRO can also integrate all versions of eHouse (LAN, RS-485,CAN, RF, PRO) creating any hybrid or combination installation - "**eHouse Hybrid**". eHouse Hybrid gives possibility to create any advanced installation depending on communication interface (wired, wireless), installation type (room switch-board, electric socket cans, central switch-board).

1.1. eHouse system applications

eHouse system was designed for interfacing software applications and all sort of electric and electronic devices. Main application of eHouse are:

- ✔ Home Automation
- ✔ Smart Home
- ✔ Building / Facility Management
- ✔ Office Automation
- ✔ Access Control & Limitation
- ✔ Security Systems
- ✔ Safety Systems
- ✔ Hotel automation
- ✔ Measurement systems
- ✔ Electronic Houses
- ✔ Low voltage house installations

Smart Home, Building, Hotel, Office Automation

- ✔ Control systems
- ✔ Visualization and graphical control
- ✔ Systems integration

1.2. Main features of eHouse PRO system

- ✔ Cheapest Professional home automation system available on the market thanks to very large controller for centralized installation
- ✔ Long live applications
- ✔ Not sensitive for elements aging
- ✔ No spread electronic in electric cans through the building
- ✔ Not sensitive for external interference, disruption, noise, sabotage, malfunction comparing to wireless systems
- ✔ Low voltage controller based on Linux microcomputer together with I/O expanders contain a lot of intelligent digital outputs (up to 256) and intelligent digital inputs (up to 256)
- ✔ Integrated security system with SMS/GSM notification
- ✔ Professional Installation in Central Switch-Board with external relays modules for security, safety, trouble-free, fast service
- ✔ Multi Platform software for integration, configuration, visualization, programming libraries
- ✔ Possibility of self development, programming integration with attached programming libraries, templates, open source code.
- ✔ Contains a lot of communication interfaces under eHouse.PRO software integration: SPI, I2C, RS-232, RS-485, USB, Ethernet, WiFi, CAN, RF, HDMI, Audio-Video output (stereo)
- ✔ Integration with Apache web server and Web browsers
- ✔ HTML Request server/client support for integration with other systems/software

2. eHouse PRO Controller (LAN, WiFi) and accessories

eHouse PRO controller work directly in LAN (Local Area Network) architecture or WiFi. Controller is stand-alone, self supported, requires direct connection to Ethernet / WiFi (Switch / Router) with Ethernet RJ-45 socket.

Ehouse PRO building management system is based on ARM Linux microcomputer and for native eHouse PRO operation it utilizes local Inputs/ Outputs ports and local serial SPI, I2C interfaces for additional I/O expanders.

Ehouse PRO contoller equiped with external communication interfaces, buffers and gateways for integration all eHouse versions (PRO, RS-485, CAN, RF, LAN) for **eHouse Hybrid** operation and other software/hardware integration.

eHouse.PRO server incorporates:

- ✔ Linux Based ARM microcomputer
- ✔ eHouse Hybrid interfaces and gateways (optional)
- ✔ eHouse.PRO server software
- ✔ Apache Server with installed eHouse4Apache module for web browser support

2.1. eHouse.PRO home automation system components

Ehouse.PRO building management system contains:

- ✔ eHouse.PRO Server
- ✔ 128 intelligent inputs modules with security system functions - up to 2 modules can be connected to eHouse.PRO server
- ✔ 128 intelligent outputs modules can work as single (on/off), double (+,-, stop) drives, gateways, etc) - up to 2 modules can be connected to eHouse.PRO server
- ✔ SMS/GSM module for security system notifications and control
- ✔ MP-18 relay modules for connecting electric devices do output (up to 8 for 128 outputs)
- ✔ RJ-12 sockets modules for easy connecting inputs
- ✔ Cover, box, for whole system or mounted eHouse.PRO switch-board ready to install on the building

2.2. eHouse.PRO server with eHouse Hybrid interfaces and gateways

eHouse.PRO system can use few number of ARM Linux microcomputers equipped with required communication interfaces. Final parameters and interfaces depends on used microcomputer board as eHouse.PRO server. Linux based microcomputers has different set of accessories, interfaces, parameters so final decision depends on hybrid installation we want create, performance and power is minor factor here.
eHouse.PRO microcomputer is extended by eHouse Hybrid module with interfaces, gateways for connecting other eHouse versions directly to eHouse.PRO server (RF, RS-485, CAN).

2.2.1 Hardware resources of eHouse.PRO Server

eHouse.PRO server functionality (with installed ehouse hybrid interfacing module):

- ✔ ARM microcomputer board - 1, 2 or 4 cores (*)
- ✔ Ethernet, WiFi, SPI, I2C, RS-232, CAN, RF, HDMI, Stereo Audio Out, IR (Infrared), USB, SATA Interfaces(*) (**)
- ✔ Security system outputs (horn, monitoring, early warning, quiet alarm, warning light) (*) (**)
- ✔ SD card with installed Linux and eHouse.PRO server software
- ✔ RS485 interface for communication to „eHouse One" system (*) (**)
- ✔ Ethernet for integration eHouse LAN system and other devices
- ✔ GSM/SMS module for SMS notification from security system and SMS control (**)
- ✔ CAN interface for direct connection eHouse CAN controllers (*) (**)
- ✔ eHouse CAN/RF gateway for integration eHouse CAN and eHouse RF systems(**)

(*) depends on Linux microcomputer board
(**) optional resources

Main functions of eHouse.PRO:

- ✔ Complete security system with SMS notification and control via Ethernet, Internet, WiFi, SMS
- ✔ Up to 256 intelligent / programmable digital outputs (on/off) with relays drivers
- ✔ Up to 128 output pairs for gates, drives, cutoff (+/-/stop) with relays drivers
- ✔ With individually configured time of movement for each drive
- ✔ Up to 256 intelligent / programmable digital inputs (on/off) for connecting
- ✔ Sensors, switches, etc.

- ✔ Built-in Real Time Clock for eHouse controller synchronization
- ✔ Built-in multi-threaded TCP/Server for control from external applications, systems, panels, smartphones, pads
- ✔ Built-in multi-threaded TCP/Client for eHouse LAN system control
- ✔ UDP reception of eHouse LAN statuses
- ✔ eHouse One system management and integration via RS-485 replacing PC or CommManager
- ✔ eHouse CAN system management and integration via local CAN interface or eHouse CAN/RF gateway
- ✔ eHouse RF system management and integration via eHouse CAN/RF gateway
- ✔ Contains 3 groups of reporting security events via SMS
- ✔ 256 programmable security zones
- ✔ 256 programmable scenes/programs for outputs
- ✔ 5 level programmable mask of security system (for each sensor and each zone)
- ✔ 256 programmable drives/security programs (including security zone)

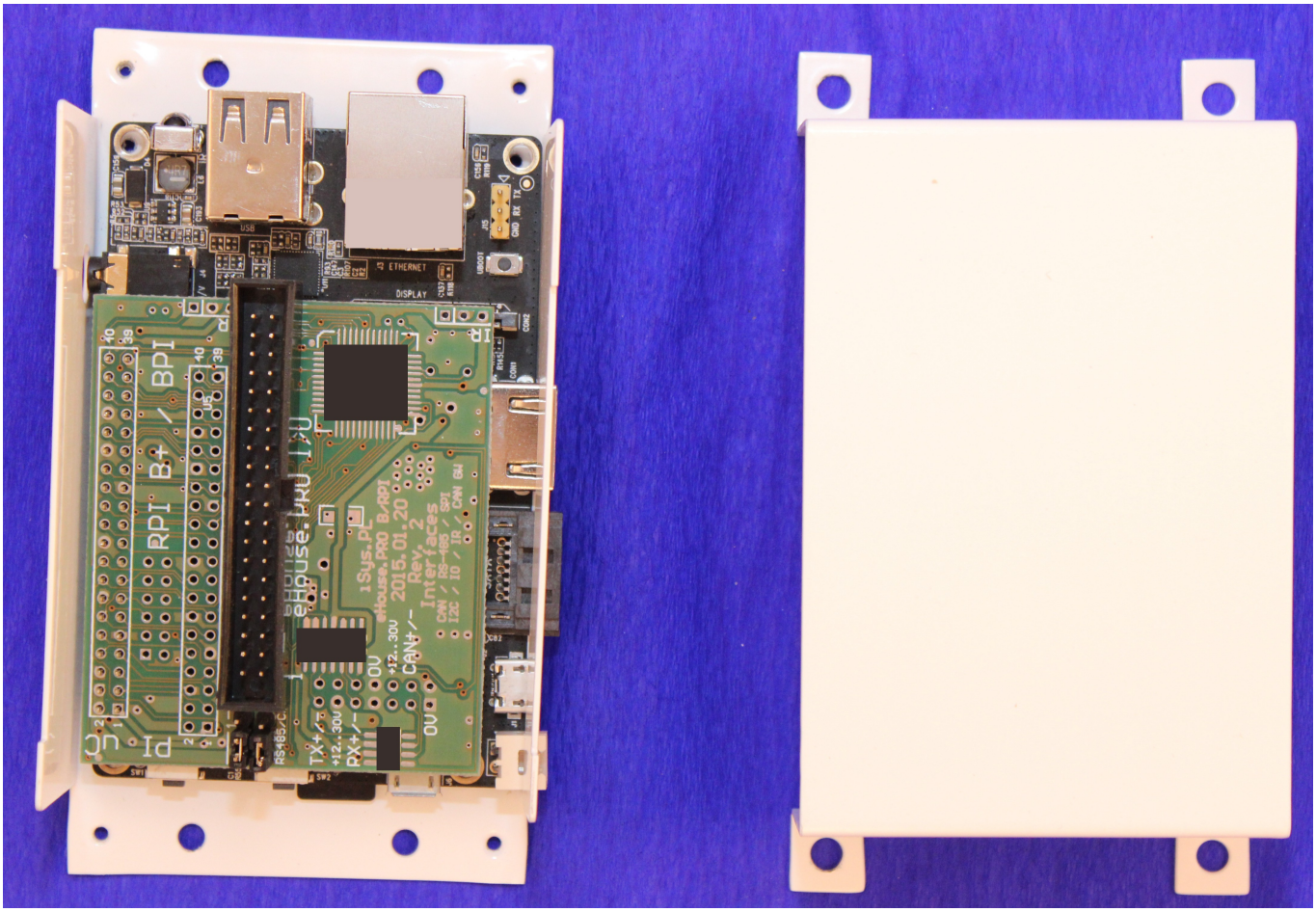

Picture for information only Not for Reference may be changed during production and development.
Pictures are not in 1:1 scale.

Dimensions: 100*70*30mm without cover / 120*70*40mm with cover and may be changed during production and development

- ✔ Modules may be RoHS or not on demand
- ✔ Installable Product RoHS not required for CE
- ✔ Complying with CE norms for (EMI)

2.3. 128 intelligent outputs expansion board for eHouse.PRO PRO128OUT

128 intelligent outputs module for eHouse.PRO is used for expansion number of outputs.

Main features:

- ✔ 128 intelligent outputs - work as single outputs (on/off), pairs of outputs for drives, gateways, cutoff, regulation (+/-/stop)
- ✔ up to 2 modules can be connected to eHouse.PRO server - 256 outputs supported
- ✔ 4 IDC-50 Male sockets for MP-18 relay modules connection (8 pcs for 128 outputs)
- ✔ 2 expansion sockets of eHouse.PRO expansion modules - IDC-40 Male

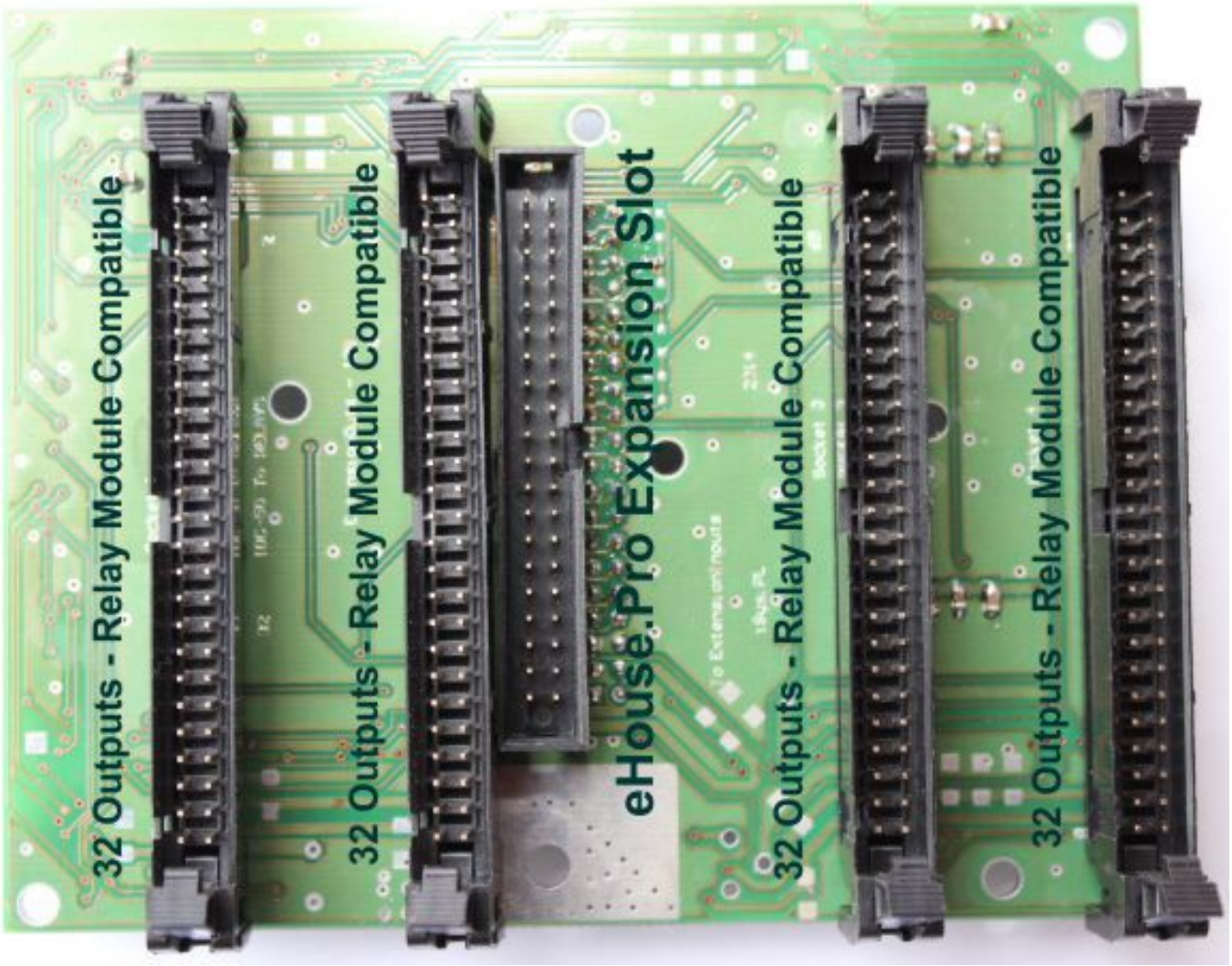

2.4. 128 intelligent inputs expansion board for eHouse.PRO PRO128IN

128 Intelligent inputs board for eHouse.PRO is used for increase number of inputs of eHouse.PRO server.

Main features:

- ✔ 128 intelligent inputs with security systems functionality
- ✔ up to 2 modules can be connected to eHouse.PRO server – 256 inputs supported
- ✔ relay contact outputs for security system (horn, warning light, early warning, quiet alarm, monitoring)
- ✔ socket for connecting alarm outputs
- ✔ 3 sockets IDC-50 Male for connecting RJ-12 (EXP-48) module for alarm sensors/inputs
- ✔ 2 expansion socket of eHouse.PRO expansion modules - IDC-40 Male

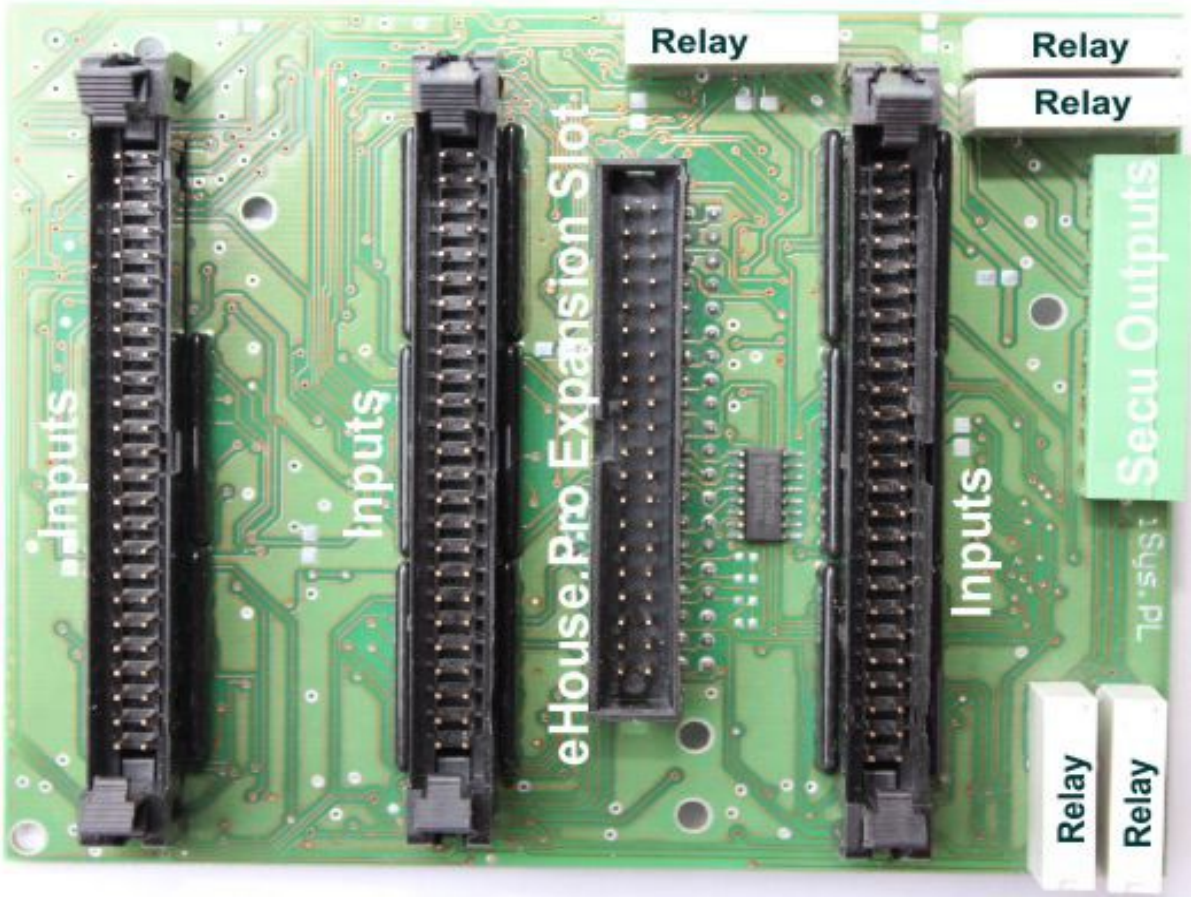

2.5. Input Expander (48) for CM for professional installation - EXP-48

- ✔ 48 * RJ-12 telephone socket for connection of security sensors (inputs switch-board) for eHouse.PRO expansion inputs and CM
- ✔ Power supply for GSM/SMS module (only for CM)
- ✔ Tamper options set by jumpers
- ✔ Fast and professional Installation, Deinstallation, Service, Maintenance

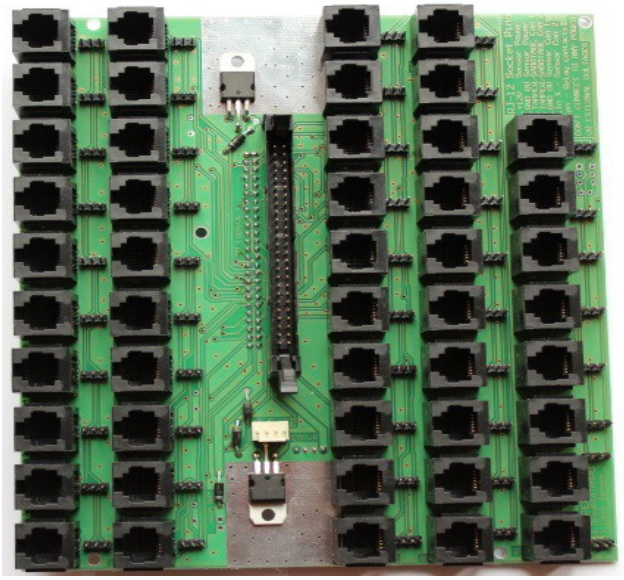

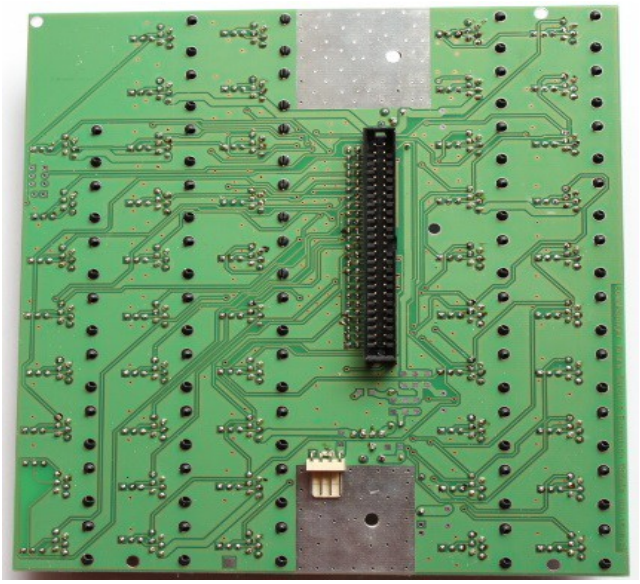

2.6. DIN Relay Module 18 for professional installation (MP-18)

- ✔ 18 relays with DIN Sockets
- ✔ Implement complete low voltage connection to eHouse controllers (Relay coils + Power Supply) - IDC-50 Male socket
- ✔ IDC-20 Male sockets for expansion modules (second MP-18 or MP-12)
- ✔ 2 modules can be connected (up to 36 relays)
- ✔ Cooper Common rail for relay contacts "COM"
- ✔ Fast and professional low voltage and 230V installation without additional wires in switch-board
- ✔ up to 8 MP-18 modules (4*36 relays) can be connected to 128 intelligent output expansion board eHouse.PRO PRO128OUT
- ✔ Fast professional, secure, safe low voltage installation in central/mini/midi switch-board
- ✔ no risk of: breakthrough 230V to electronic, fire, electric shock, damage whole system and connected devices
- ✔ 6 pin socket for connecting power supply

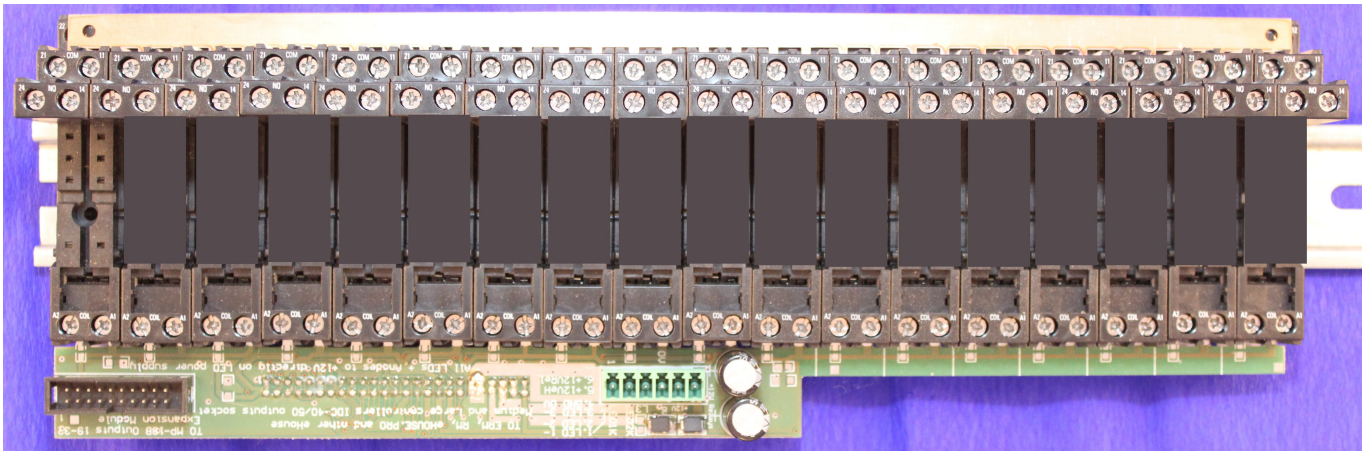

2.7. Central switch-board box for eHouse.PRO (128 outputs 230V/16A and 128 inputs) – SWBOX128

Metal Box dimmension 1067x150x907mm with front frame / 1000*150*840mm without front frame.

Functionality and equipment:

- ✔ 4 * DIN/TH rails (for 45 modules) for installation MP-18 relay modules and other accessories

- ✔ 8 bars (8*18) for installation (shorten) neutral and safety 230V cables
- ✔ Removable front frame for installation, plastering and painting building
- ✔ Left / right doors with 2 locks with keys
- ✔ Threaded wholes for installation eHouse LED 12V/8A power supply
- ✔ Threaded wholes for installation eHouse.PRO controller, 2*Inputs and 2*outputs expanders of eHouse.PRO
- ✔ Metal covers/shield of electronic and low voltage part of installation
- ✔ Threaded wholes for installation for external 230V and low voltage cables
- ✔ Shelf for Accumulator for UPS backup
- ✔ Maskable wholes for enterance 230V cables and alarm sensors cables into the switch-board

2.8. Mounted central swith-board of eHouse.PRO (128 intelligent outputs 230V/16A and 128 intelligent inputs) - EHOUSEPROSW

Mounted and internally connected switch-board of eHouse.PRO Building Management system ready for installation in home. It contains complete accessories of eHouse.PRO:

- ✔ Metal cover of Switch-board SWBOX128 with full set of accessories
- ✔ eHouse.PRO server + software + metal cover
- ✔ single 128 intelligent inputs expansion module eHouse.PRO (2 modules for 256 inputs - optionally)
- ✔ single 128 intelligent outputs expansion module eHouse.PRO (2 modules for 256 outputs - optionally)
- ✔ 8 relays modules with relays and socket for easy installation 18*230V/16A - MP-18
- ✔ 8 cooper comb for short relay „COM” contract for whole MP-18 (can be cut on desired length)
- ✔ Switching power supply 230V=>12V/6A for eHouse PRO
- ✔ Switching UPS power supply 12V/6A and accumulator 12V/20Ah (Optional)
- ✔ Switching-power supply 5V/3A
- ✔ Screwed socket for connecting 230V cables
- ✔ Screwed socket for connecting low voltage cables
- ✔ Three 48*RJ-12 input modules EXT-48 for easy and fast installation of alarm sensors and inputs
- ✔ Complete set of metal shield/covers for electronic and low voltage part of installation
- ✔ Complete set of low voltage flat cables for internal connection.

2.9. "eHouse" Software Package

eHouse.Pro system is also equipped with auxiliary software for many operating systems including configuration, management, control, visualization, graphical control, web browser support, integration to other systems interfaces.

2.9.1 eHouse LAN, RS-485 windows package (for eHouse Hybrid installations)

- ✔ monitoring devices state
- ✔ allows easy, intuitive, secure configuration, naming of whole eHouse system from PC
- ✔ eHouse system event editing and creating
- ✔ scheduler editing and programming
- ✔ generating images for visualization purposes
- ✔ creating eHouse system logs
- ✔ decoding IR remote controller signals
- ✔ updating new firmware and configuration to all controllers

2.9.2 eHouse.PRO binary Linux software package

eHouse.PRO assures supervision and integration of all versions of eHouse system.
Currently supported Linux versions:

- ✔ RaspberryPi or other based on ARM11
- ✔ Banana PRO/PI
- ✔ x64
- ✔ x86
- ✔ Other Linux boxes may be developed depending on availability on the market

Main Functions (in reference to eHouse PRO / Hybrid):

- ✔ Web Browser integration
- ✔ Apache Web Server integration (TCP Server)
- ✔ TCP Clients for eHouse LAN / eHouse PRO connection for integration
- ✔ TCP Servers for panels connection
- ✔ UDP listener for eHouse LAN, eHouse PRO status reception
- ✔ eHouse One support for integration (via RS-485 bus)
- ✔ eHouse PRO support for integration
- ✔ eHouse CAN support for integration (via CAN bus)

- ✔ eHouse CAN/RF support for integration (via eHouse CAN/RF gateway)
- ✔ Implements SMS hardware gateway support for SMS reception and transmission
- ✔ HTML requests client support to control other systems, applications, programs
- ✔ HTML requests server for control eHouse PRO/Hybrid system by other systems, applications, programs
- ✔ Update configuration of eHouse CAN, eHouse RF controllers
- ✔ Generate automatic visualization of each eHouse controller
- ✔ TCP server for integration to other systems
- ✔ Supports Onkyo Audio-Video systems via Ethernet
- ✔ Supports Denon, Marantz Audio-Video systems via Ethernet
- ✔ Process IR control signals received from any controllers

eHouse.PRO are under constant development and functionality may change without notice.

2.9.3 eHouse4Apache Module

Loadable Apache Web server module for increase its functionality.

- ✔ Enables integration of eHouse PRO with Apache WWW server
- ✔ transfer data between web browser and eHouse PRO
- ✔ transmit events, commands, configuration
- ✔ send statuses to web browser

2.9.4 Android (Java) - Control Panel Software since 4.0.0 (eHouse4Android)

eHouse4Android application is supported by various Android hardware devices eg.

- ✔ Pods
- ✔ Pads
- ✔ SmartPhones
- ✔ SmartTV

Main functions:

- ✔ Text control
- ✔ Voice control (Speech recognition)
- ✔ Graphical control
- ✔ Online status via TCP, UDP (Local Network)

- ✔ Graphical visualization individually designed
- ✔ Graphical visualization automatic for each eHouse Controller
- ✔ Control via WiFi, Ethernet, LAN, Internet, SMS, eMail
- ✔ Online status via WiFi, Ethernet, LAN, Internet
- ✔ Supports eHouse 1, eHouse LAN, eHouse.PRO versions

2.9.5 Java - PC Control Panel Software (eHouse4Java)

- ✔ Linux
- ✔ Windows
- ✔ other Java enabled system

Main functions:

- ✔ Text control
- ✔ Graphical control
- ✔ Online status TCP, UDP (Local Network)
- ✔ Graphical visualization individually designed
- ✔ Automatic graphical visualization for each eHouse Controller
- ✔ Control via WiFi, Ethernet, LAN, Internet, eMail
- ✔ Online status via WiFi, Ethernet, LAN, Internet
- ✔ TCP server for connecting external panels
- ✔ TCP server for OpenRemote support
- ✔ Supports eHouse 1, eHouse LAN, eHouse.PRO versions

2.9.6 Windows Mobile 6.x+ .Net, .Net Compact Framework - Control Panel for devices (Mature – only for eHouse RS-485, LAN under eHouse Hybrid installation, only for development)

- ✔ Pods
- ✔ Pads
- ✔ SmartPhones

Main functions:

- ✔ Text control

- ✔ Graphical control
- ✔ Online status TCP, UDP (Local Network)
- ✔ Graphical visualization individually designed
- ✔ Automatic graphical visualization for each eHouse Controller
- ✔ Control eHouse system via WiFi, Ethernet, LAN, Internet, SMS, eMail
- ✔ Online status via WiFi, Ethernet, LAN, Internet
- ✔ Supports eHouse 1, eHouse LAN versions

2.9.7 JavaScript script - for Web browser client side support

- ✔ online status reception via JSON, data update
- ✔ online text control
- ✔ online graphical control
- ✔ online graphical visualization
- ✔ sending control commands (events) to eHouse system
- ✔ supports eHouse 1, eHouse LAN, eHouse.PRO versions
- ✔ supports SVG (Scalable Vector Graphics), XML

2.9.8 CorelDraw VBA script - for creating visualizations for all control panels

- ✔ WebBrowser: HTML, SVG, XML
- ✔ Custom programmed formats (text)
- ✔ Windows XP, Vista, 7, 8 - PC, Pods, Pads
- ✔ Windows Mobile .Net, .Net Compact Framework - Pods, Pads, Smartphones
- ✔ Java - visualization and graphical control for PCs Java enabled platforms
- ✔ Android - visualization and graphical control for SmartPhones, Pods, Pads, SmartTV
- ✔ supports eHouse 1, eHouse LAN, eHouse.PRO versions
- ✔ supports templates

2.10. Programming libraries and code sources for development

For eHouse system developers and members of eHouse Alliance we offer programming libraries and scripts for most of operating systems:

- ✔ Windows XP, Vista, 7, 8, .Net (*)
- ✔ Windows Mobile 6.x,7,8 .Net Compact Framework (*)
- ✔ Linux x86, x64, ARM, RaspberryPi
- ✔ Java enabled platforms and operating systems
- ✔ Java Mobile for PDAs, Palmtops, Smartphones (*)
- ✔ Web Server (Apache) modules
- ✔ Web Browser Integration scripts
- ✔ OpenRemote.Org integration (*)
- ✔ Android

(*) - only for eHouse Hybrid (eHouse LAN, RS-485 without CAN/RF, PRO)

Libraries and scripts in most important programming languages:

- ✔ Delphi, Pascal (*)
- ✔ C,C++
- ✔ C#, .Net, .Net Compact Framework (*)
- ✔ Java, Java Mobile (MIDP) (*)
- ✔ Android (Java)
- ✔ VBA – Visual Basic
- ✔ PHP
- ✔ SVG, XML
- ✔ HTML
- ✔ JavaScript

Libraries are individually distributed base on license agreement and fees.

(*) - only for eHouse Hybrid (eHouse LAN, RS-485 without CAN/RF, PRO)

3. Technical documentation of mounted eHouse.PRO central switch-board - Hardware

This technical documentation covers only mounted, ready to use eHouse.PRO switch-board.

For DIY (Do It Yourself), hobbyist information are located on eHouse DIY Blog
http://Smart.eHouse.PRO/

eHouse.PRO software for Linux is described on eHouse DIY Blog.

eHouse.PRO configuration are located at SD card in following folders:

- ✔ /usr/local/ehouse
- ✔ /usr/local/e-house

Intuitive WWW configuration: **http://192.168.0.200/eh.x?RoomPanel=**

3.1. Connection of intelligent alarm inputs, sensors, switches

eHouse.PRO switch-board contains installed modules **Expander-48*RJ-12** for professional, easy, fast connection, maintenance, change of input wires with 6 pin RJ-12 telephone sockets. Thanks to this it is not necessary to make screwed connections of thousands cables.

RJ-12 sockets order is located on PCB of expander-48*rj-12 and module picture below.

3.1.1 RJ-12 connection

1. +12V – Alarm sensor power supply (marked on PCB drawing)
2. 0V (GND) – power supply for alarm sensor 0 V
3. Tamper/Sabotage contact A of alarm sensor relay
4. Tamper/Sabotage contact B of alarm sensor relay
5. Alarm contact A of alarm sensor relay – activation of alarm sensor (or input, switch, digital sensor, etc.).
6. Alarm contact A of alarm sensor relay – activation of alarm sensor (or input, switch, digital sensor, etc.).

Do not connect external voltages nor outputs without galvanic isolation (relay).

Do not short GND (Grounds) or power supplies (VCC).

Tamper/Sabotage contacts are connected serially on PCB to avoid necessity of connecting wires manually. **Do not polarize/bias any relay contacts (ALARM, SABOTAGE) with resistors as in common analog security systems.**

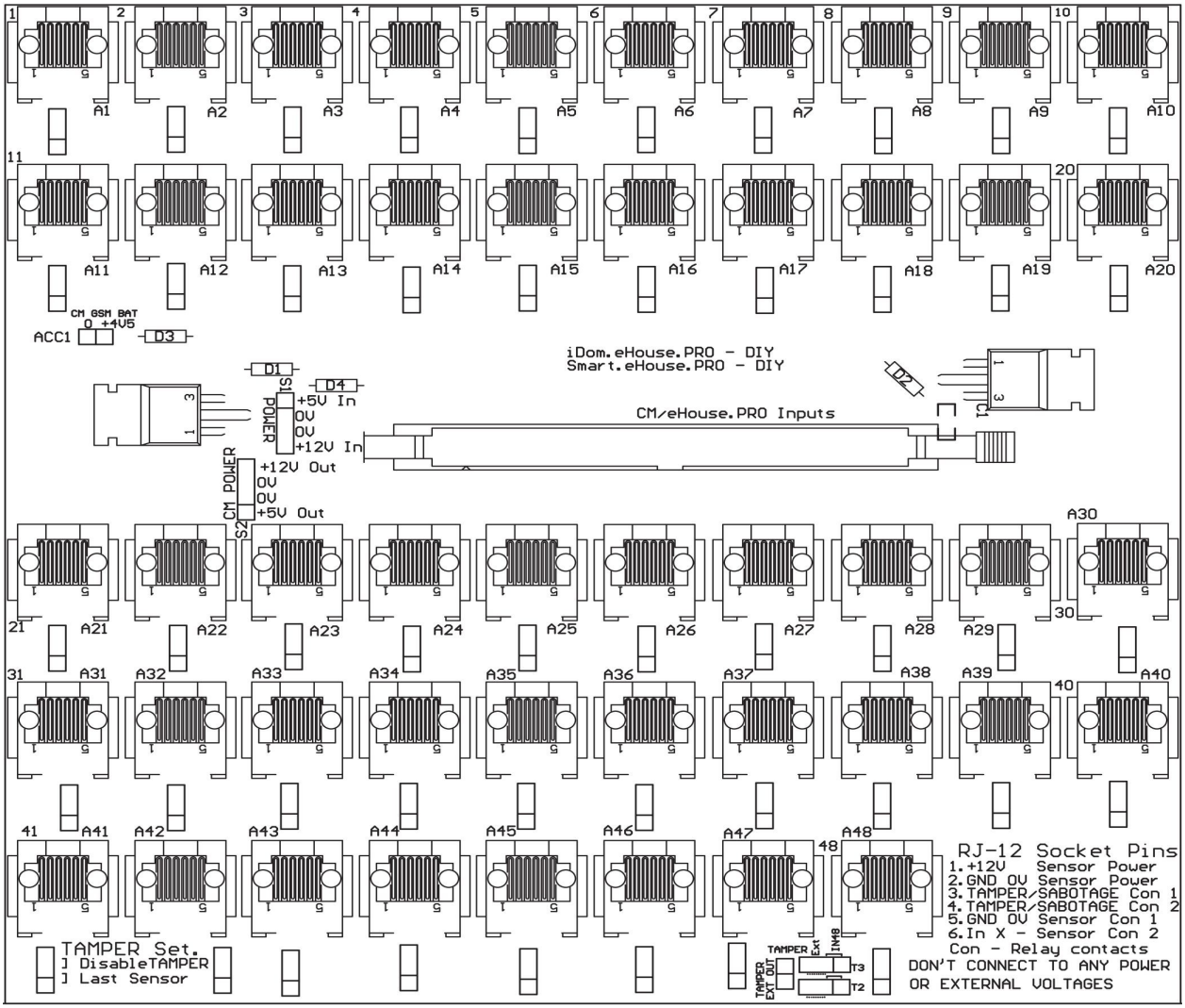

3.1.2 Sabotage Jumpers

Each RJ-12 socket have assigned tamper/sabotage jumper for setting desired action of tamper input. You can disable checking of current sensor sabotage input or ignore any further outputs.

1) Position **1-2** – Last alarm sensor with sabotage test
2) Position **2-3** – Disable testing of sabotage/tamper inputs for current sensor (shorten sabotage contact with jumper) eg. for switches, contacts, etc.
3) No jumper **1-2-3** normal operation of tamper/sabotage

For best and fastest results you should sequentially connect any alarm sensors with sabotage/tamper input and later switches without tamper/sabotage functionality.

Otherwise one Expander can test TAMPER input (for alarm sensors), another (for switches ignore it)

3.1.3 Sabotage selection Jumper (2*3 pin T3,T2)

Serially connected TAMPER contacts can be shorten internally with these jumpers to the last alarm input (48) of current RJ**-12 Expander module** or make it usable externally (for 2 pin sockets).

Jumpers Pairs 2*3 pin T3, T2 (pin 1 is rectangular on PCB)

1) Position **1-2** of both 3-pin jumpers – serially connected tamper/sabotage contacts are connected to INPUT 48 of current Expander as standard alarm sensor

2) Position **2-3** of both 3-pin jumpers – serially connected tampers/sabotage contacts are connected to 2-pin socket for external usage

3.1.4 IDC-50M – connection to 128 intelligent inputs module

This socket should be connected with IDC-50 flat tape wires with IDC-50F plugs (1:1) to 128 intelligent inputs module.

Pins	Description
1..48	Alarm inputs IN1..IN48 (open/short to GND)
49,50	0V (GND – ground of electronics)

4. Power supply S1 (4 pins)

This sockets supplies +12V UPS power to alarm sensors. +5V voltage is not used for eHouse.PRO installation.

Pining:

1) +5V input from power supply (do not connect)
2) GND
3) GND
4) +12 input from UPS power supply for alarm sensors

4.1. Connection of intelligent digital outputs (On/Off)

Digital outputs available on **128 intelligent outputs module** contains relay drivers for direct connection of relays coils. Relays are normally located on MP-18 Relay module which realize all low voltage connections of relay coils with single IDC-50 flat cable (max 2m) with IDC-50F plugs (1:1).

In mounted eHouse.PRO switch-boards connections are already installed.

Pins	**Description**
1,2	+12V relay coil power supply
3..34	Outputs 1..32 (for connection to relay coils)
38..42	GND (0V)

MP-18 relay module contains 18 relays with DIN/TH sockets, so it is required to connect 2 MP-18 relay modules to use all 32 outputs available on IDC-50 socket. Expandable relay module should be connected with IDC-20 flat cable (1:1) with plugs: IDC-20F (first module) i IDC-50F (expandable module). On second module there are spare (unconnected) 4 relays witch can be used for turn on/off additional devices in parallel with other relays (eg. multi-phase power, multi -channel).

5. Connection On/Off Devices/Loads to relay contacts on MP-18 relay module

MP-18 relay modules contains screwed connections for direct montage of cables to relay contacts NO (Normally Open from COM contact) or NC (Normally Closed to COM). Main supply voltage is connected to COM contact.

If we use single voltage or phase for whole MP-18 relay module, we can use cooper comb for shorten all COM contacts together without any cables.

Cooper Comb can be also cut for desired length, if we want to divide power supply from single MP-18 control.

Because eHouse.PRO switch-board contains 8 MP-18 relay modules, 8 different supply voltage/phases can be used without cutting the cooper comb.

It makes much easier installation without additional cables installation for COM contacts.

Cooper comb should be properly isolated to protect against: sparkling, shorten, electric shock hazard.

230V single phase devices connection is displayed on image below.

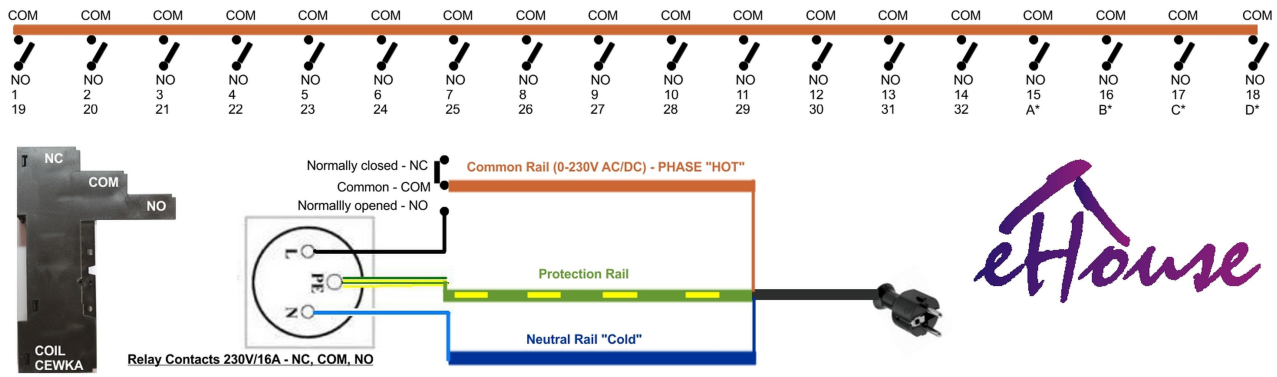

Blue Wire (Neutral) is screwed to nearest neutral rail (blue).

Green-Yellow Wire (safety) is screwed to nearest safe rail (yellow).

5.1. LAN Network connection

Linux Micro-computer installed in switch-board contains LAN (Ethernet RJ-45) interface for direct connection to Local Area Network. It requires connection with UTP-8 (6 cat.) with two RJ-45 plugs – common Ethernet cable 100M/1G.

Some eHouse.PRO micro-computers may have on-board WiFi available, enabling wireless connection of eHouse.PRO to WiFi network. Proper configuration of Linux networking is mandatory. WiFi antenna must be put externally the eHouse.PRO metal switch-board cover.

5.2. GSM/SMS module connection

GSM/SMS module could be connected to standard USB port. GSM must be equipped with active SIM card with funds available permanently to make external calls and SMS. In case of lack funds for external calls GSM/SMS notification will stop work.

For best results GSM module should be put externally the metal switch-board cover with long USB cable (1m), which expands range and limit power consumption of GSM module.

6. Ehouse Hybrid Installation – connection to other eHouse Version

In case of usage some functions not available directly in eHouse.PRO native system, it is necessary to create hybrid installation with other eHouse Architecture.

Functions which requires hybrid installation:

- IR reception for eHouse Control
- IR Transmission for control external Audio/Video systems
- Analog measurement, ADC conversion, regulations
- LED light dimming

eHouse.Pro server software together with connected communication interfaces supports other eHouse variants:

- LAN (eHouse Ethernet) – do not requires additional interfaces
- RS-485 (eHouse One) – RS-232/RS-485 converter is available on eHouse.PRO interface module. In case of no spare internal RS-232 port available, RS-232/USB dongle + external RS-232/RS-485 eHouse converter could be used
- CAN/RF (eHouse CAN, eHouse RF) - interfacing eHouse CAN & RF requires external „**eHouse CAN/RF Gateway**" connected to RS-232 serial port of eHouse.PRO server. Because it contains RF wireless radio module it requires putting outside metal cover of eHouse.PRO switch-board. Schematic of connection other eHouse version are available in **Appendix** chapter.

7. Connection Low Voltage power supply for eHouse.PRO switch-board

Fully mounted eHouse.PRO switch-board may contain power supplies including UPS with battery backup supply:

- +12V/4.5A UPS – powering alarm sensors (do not connect any additional loads)
- +5V/3A UPS for powering electronics, micro-computer, controllers (do not connect any additional loads)
- +12V/7A without UPS functionality – powering relays and optional components of eHouse.PRO installation

eHouse UPS contains voltage regulation (+V ADJ) and can be set to desired value 13..13.8V. UPS contains 2 alarm outputs (relay contacts):

- Battery Low
- AC OK (100..230V OK)

It could be connected directly to alarm inputs of eHouse.PRO for constant monitoring of power supply and battery condition. UPS power is sufficient only for powering electronics and alarm sensors. Do not connect any other loads for longest battery operation.

7.1. Connection eHouse.PRO switch-board to 100..230V power supply

Ehouse.PRO switch-board 100..230V/380V can be connected only by authorized and certified electric staff. Ehouse.PRO Switch-board do not contains any protections (over-current / differential-current fuses), and installator is responsible to use proper protection depending on installation configuration of electrical devices connected to eHouse.PRO Switch-board.

Each (4) DIN/TH rails contains in total 15cm free space for DIN fuses installation.

In case of installation multiple differential-current fuses, neutral rails connections should also be analyzed for proper operation. In case of wrong connection, differential-current fuses may turn off without any reasons.

Any eHouse.PRO switching power supplies works with 100V up to 240V voltage ranges, so eHouse.PRO switch-board can be installed in any country considering, voltage of mains. Electric loads connected to relay contacts can work up to 230V AC.

Relays installed in MP-18 relay modules are 230V/16A of resistive load.

Do not connect inductive loads (inductive kitchen, motors, trafos) with power larger than 250W, which will affect fast damage of relays.

Relays may works with constant voltages (DC) up to 10A per relay contact.

8. Appendix

8.1. Management of eHouse PRO/Hybrid system

eHouse.Pro Home Automation System can be managed and controlled from:

- ✔ Web Browser WWW
- ✔ PC Computer, Pads, Pods, Touch screen panels - eHouse software package (Windows XP, Vista, 7, 8, Linux, Java)
- ✔ Practically Any Mobile phone, PDA, Smart Phone, Touch Phone, Pod, Pad, Smart TV thanks to software package: Android 4+ (Java), Windows Mobile 6.x+ (*), Java Mobile MIDP (*) - No dedicated panels necessary
- ✔ IR Remote Controller - supported SONY standard protocol (SIRC) (using common SONY remote controller, universal, smart IR panel eg. Logitech, Philips, etc) (for eHouse Hybrid with any eHouse LAN, RS-485, CAN/RF controllers)
- ✔ Advanced scheduler, calendar (for eHouse Hybrid LAN/RF-485)
- ✔ Common electric switches
- ✔ Touch sensors

(*) Mature solutions available for vendors for development

8.2. Systems and devices controlled by eHouse PRO, Hybrid

eHouse system can control and integrate a lot of external devices and systems:

- ✔ internal and external lights (any voltage AC / DC, LEDs, RGB, PWM dimmers for 12VDC lights)
- ✔ temperature measurement, regulation, management in rooms (eHouse Hybid together with eHouse LAN, RS-485, CAN/RF installation)
- ✔ individual, central, floor, convector or ventilation heating (eHouse Hybid together with eHouse LAN, RS-485, CAN/RF installation)
- ✔ pumps, motors, ventilators, executive devices, cut-off
- ✔ any electric and electronic devices (on / off)
- ✔ HiFi, Audio, Video systems via IR remote controller signal learn and send (eHouse Hybid together with eHouse LAN, RS-485, CAN/RF installation)
- ✔ VideoLAN application from IR remote controller and eHouse system (eHouse Hybid together with eHouse LAN, RS-485, CAN/RF installation)
- ✔ rollers, shade awnings, gates, gateways, drives, servo-motors
- ✔ integrated security system with SMS notification and control managed outside controlled zone
- ✔ Control external Devices, Systems, Applications, Programs by HTML Requests
- ✔ Control eHouse PRO from other systems by HTML Requests
- ✔ Control Onkyo A/V systems by TCP/IP equipped in Ethernet / WiFi

8.3. Schematics of eHouse.PRO home automation switch-board

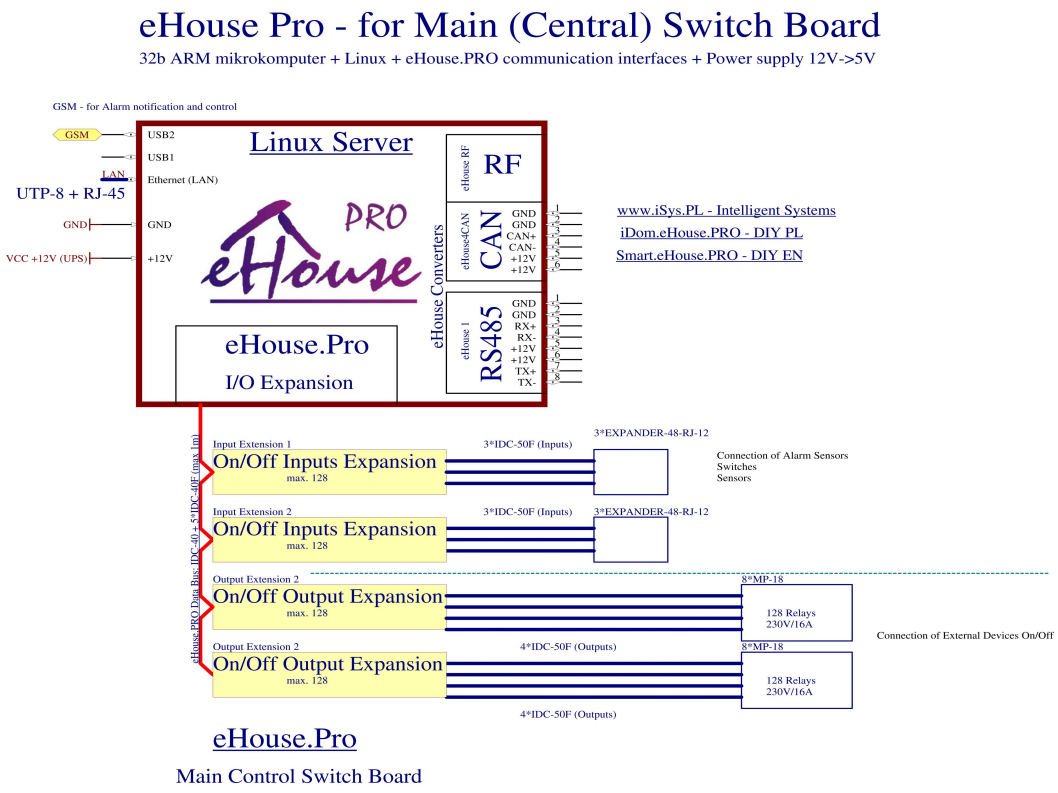

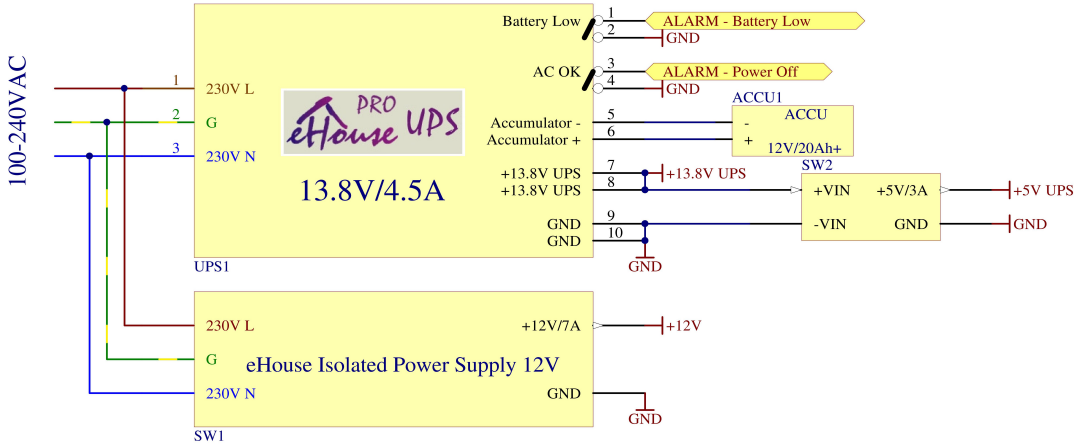

www.iSys.PL - Intelligent Systems

iDom.eHouse.PRO - DIY PL

Smart.eHouse.PRO - DIY EN

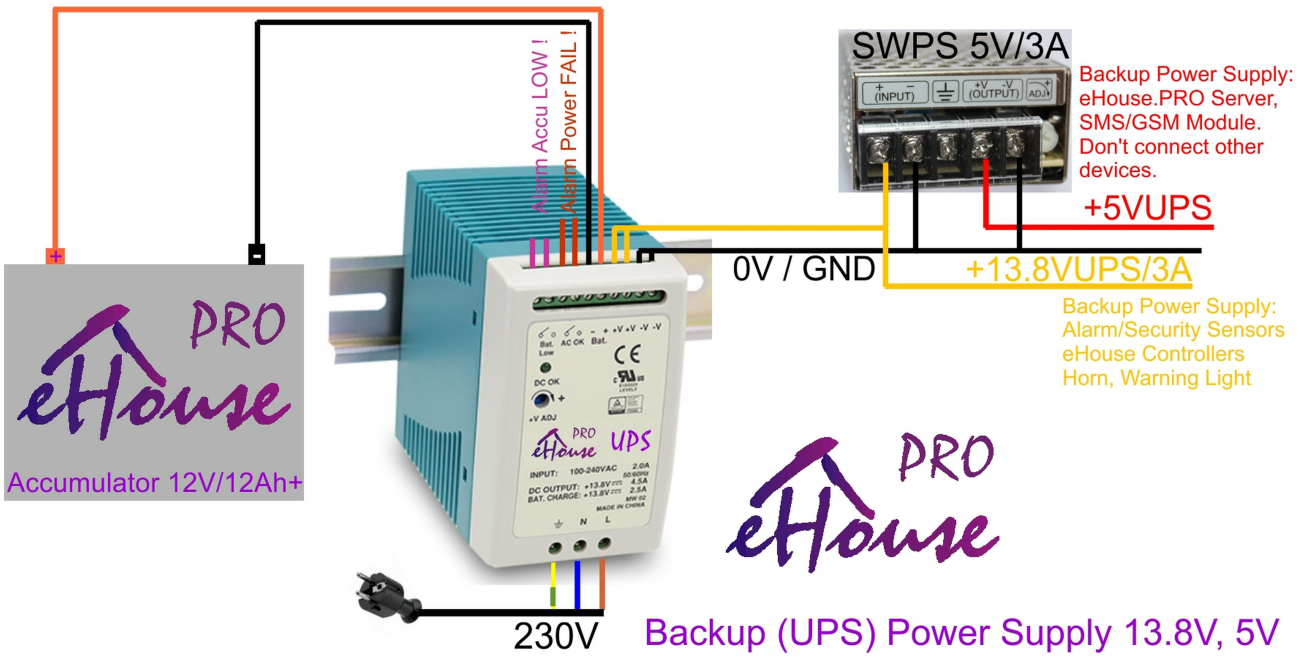

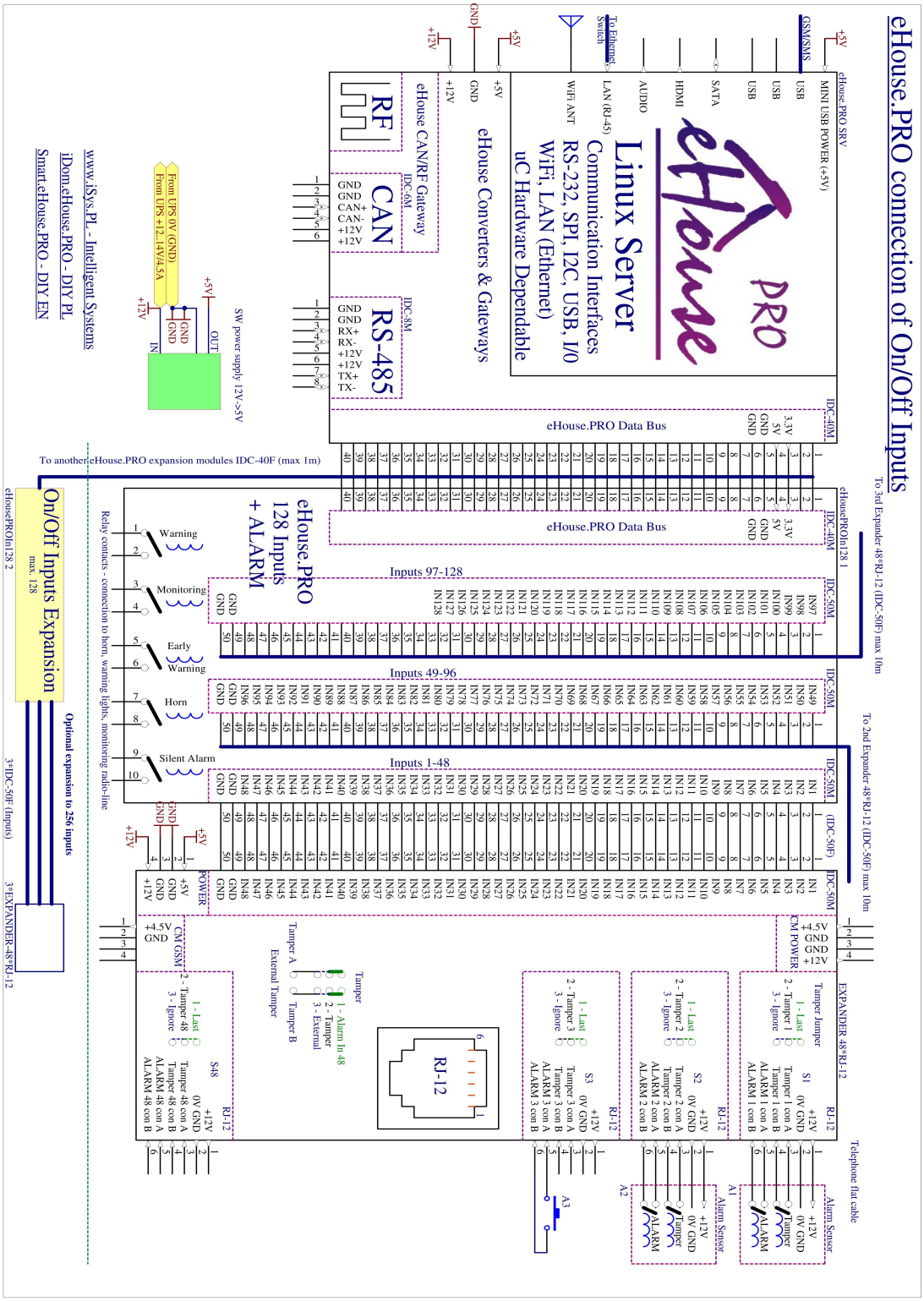
eHouse.PRO connection of On/Off Inputs
Linux Server
Communication Interfaces
RS-232, SPI, I2C, USB, I/O
WiFi, LAN (Ethernet)
uC Hardware Dependable
eHouse Converters & Gateways
eHouse CAN/RF Gateway
RF
CAN
RS-485
eHouse.PRO Data Bus
eHouse.PRO 128 Inputs + ALARM
Inputs 97-128
Inputs 49-96
Inputs 1-48
Warning
Monitoring
Early Warning
Horn
Silent Alarm
On/Off Inputs Expansion
max. 128
Optional expansion to 256 inputs
To another eHouse.PRO expansion modules IDC-40F (max 1m)
To 3rd Expander 48*RJ-12 (IDC-50F) max 10m
To 2nd Expander 48*RJ-12 (IDC-50F) max 10m
Relay contacts - connection to horn, warning lights, monitoring radio-line
3*IDC-50F (Inputs)
3*EXPANDER-48*RJ-12
Telephone flat cable
Alarm Sensor
RJ-12
www.iSys.PL - Intelligent Systems
iDom.eHouse.PRO - DIY PL
Smart.eHouse.PRO - DIY EN

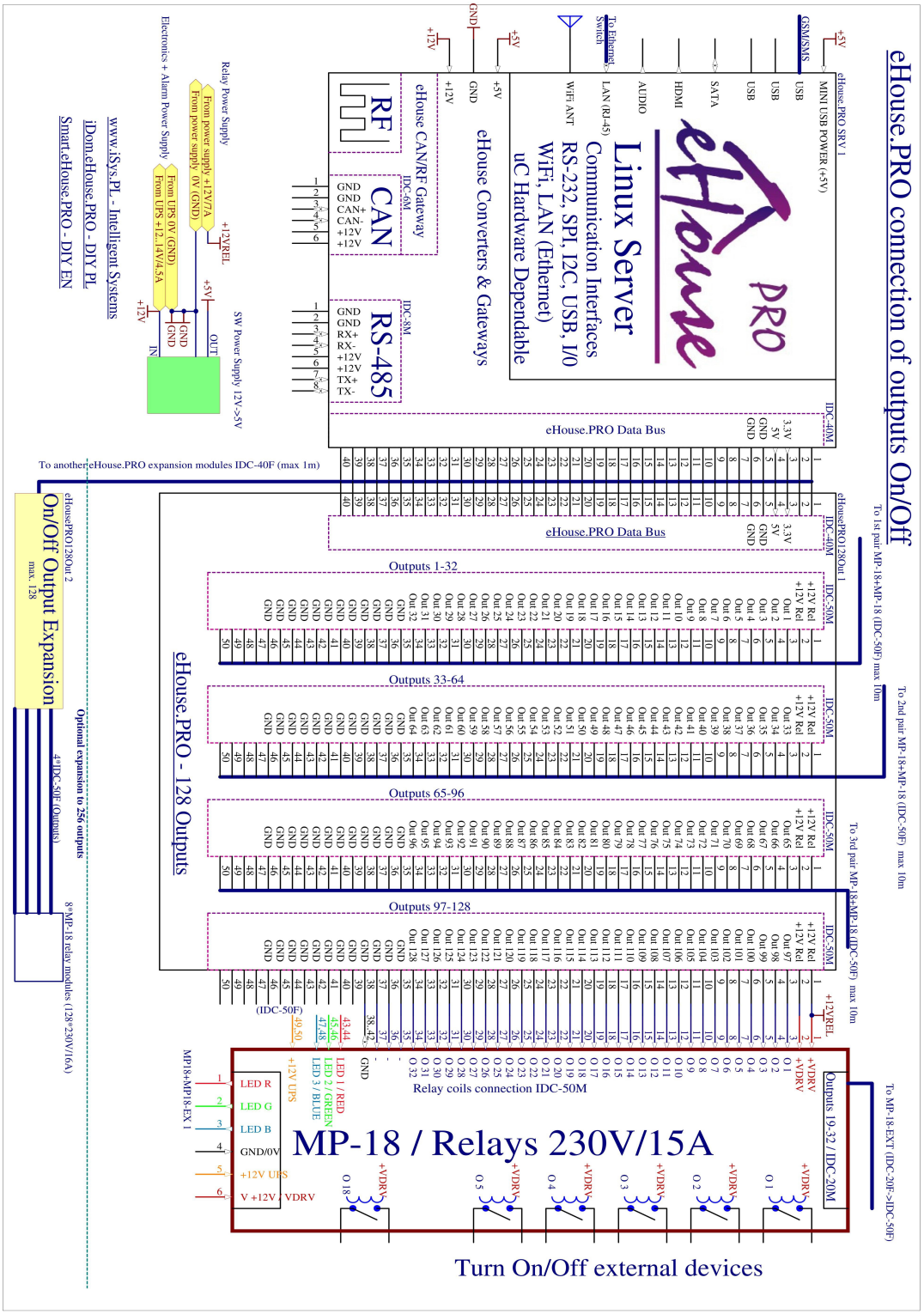
eHouse.PRO connection of outputs On/Off
eHouse.PRO Linux Server
Communication Interfaces
RS-232, SPI, I2C, USB, I/O
WiFi, LAN (Ethernet)
uC Hardware Dependable
eHouse Converters & Gateways
eHouse CAN/RF Gateway
RF
CAN
RS-485
eHouse.PRO Data Bus
To another eHouse.PRO expansion modules IDC-40F (max 1m)
On/Off Output Expansion
max. 128
eHouse.PRO - 128 Outputs
Outputs 1-32
Outputs 33-64
Outputs 65-96
Outputs 97-128
Optional expansion to 256 outputs
8*MP-18 relay modules (128*230V/16A)
4*IDC-50F (Outputs)
Relay coils connection IDC-50M
MP-18 / Relays 230V/15A
Turn On/Off external devices
Outputs 19-32 / IDC-20M
To MP-18-EXT (IDC-20F->IDC-50F)
To 1st pair MP-18+MP-18 (IDC-50F) max 10m
To 2nd pair MP-18+MP-18 (IDC-50F) max 10m
To 3rd pair MP-18+MP-18 (IDC-50F) max 10m
Relay Power Supply
SW Power Supply 12V->5V
Electronics + Alarm Power Supply
www.iSys.PL - Intelligent Systems
iDom.eHouse.PRO - DIY PL
Smart.eHouse.PRO - DIY EN

8.4. Screenshots

http://home-automation.isys.pl/all,eHouse_smart_home_visualization_galery.htm

http://www.isys.pl/all,inteligenty_dom_budynek_galeria_software.htm

8.5. Comparison table of eHouse Versions

Many eHouse versions (RS-485, LAN, CAN/RF, PRO) enables individual selection depending on preference, budget, architecture, amount of controlled points and many aspects to achieve most accurate home automation system to user needs. All versions are integrated by eHouse.PRO server (eHouse Hybrid) so it can be any combination of hybrid instalation and works under the same eHouse Control Panel software applications on different operation systems taking advantage of any system benefits.

Item / Architecture	PRO	RS485 supervision PC / CM	LAN	CAN (EC)
Main Interface	Ethernet 100/10	RS-485 full duplex	Ethernet (10Mb)	CAN (Controller Area Network)
Interface Speed	100Mb/1Gb	115.200kb	10Mb	100kb
Maximal Range Total	20m to Ethernet Switch	1200m segment, serially + terminators (theoretical)	20m to Ethernet switch	500m segment, serially + terminators (theoretical)
Maximal range star topology	20m	200m must be tested individually, 1 terminator	20m	100m must be tested individually, 1 terminator
Cable Type	UTP-8	UTP-8	UTP-8	UTP-8, AWT-6
Expandable segments	No need 4	+ unlimited (Hardware) / -	No need	+ unlimited (Hardware)
Controllers per segments	1	250 / 250	250	125
Total controllers in system	4	125 supported by apps ~65000 / 30	250 supported by apps / ~65000 theoretical	125 supported by apps / ~10000 theoretical
RoomManager	-	+	+	-
Rollers / Gates Control	128(256)	EM (13) / CM (40)	CM (40)	EC (2)
Rollers Programs	256	24 / 24	24	-
Max Rollers Controllers	1	1*EM / 1*CM	4*CM	125*EC
HeatManager	-	+	- / HM via CM	-
Stand-alone Security System	+	- / + CM	CommManager (CM)	- / Software **eH4c**Server implementation
Alarm Sensors Count	128/(256)	- / CM (48)	CM (48)	EC (4)
Max Alarm Sensors Controllers	1	- / 1 * CM	4 * CM	125 * EC
Security Zones	256	- / CM (21)	CM (21)	Individual Settings
Alarm Horn Output	Hardware	- / Hardware CM	Hardware CM	Software + Firmware Event
Alarm Warning Output	Hardware	- / Hardware CM	Hardware CM	Software + Event
Early Warning Output	Hardware	- / Hardware CM	Hardware CM	Software + Event

Item / Architecture	PRO	RS485 supervision PC / CM	LAN	CAN (EC)
Monitoring Output	Hardware	- / Hardware CM	Hardware CM	Software + Event
Silent Alarm	Hardware	-	-	-
GSM/SMS	Hardware	SmsGateway.exe / CM (Hardware)	CM (Hardware)	eH4C + Hardware SMSGate
Email control	-	EmailGate.exe / -	-	-
Ftp control	-	FtpGate.exe / -	-	-
BlueTooth	-	BlueGate.exe + RM BlueTooth Module	-	-
Mifare card reader - (attendance)	-	Optional RM expansion module	-	-
Access Control	-	RM + Mifare RFID	External RFID + Software	External RFID + Software
Function Limitation	-	RM + Mifare RFID	-	-
Digital Inputs	128/(256)	RM (12), EM (12)	ERM (12), CM/LM (48)	EC (4)
Inputs support touch sensors / switches	-	-	-	+
Inverted inputs support	+	-	+	+
Authorization to system	Challenge-response, xored password, plain password, none, Apache security	Not required	Challenge-response, xored password, plain password, none	Based on Apache web server security
Supervising Host	Not Required	Required PC, CM, computer board, uC	Not Required	Not Required
Communication gateway to LAN	Not Required	Required PC (RS232<=>485) + eHouse.exe/eH4C, computer boar, uC / CM not required	Not Required	Required (RS232<=>CAN) + linux Box + eH4C
Windows XP,Vista,7,8 app Manage&Control (M), Config (C),Visualization (V), Status (S), Graphical Visualization(G)	-MCVSG	+M +C +V +S +G	+M +C +V +S +G	+M +C +V +S -G only via WB

Item / Architecture	PRO	RS485 supervision PC / CM	LAN	CAN (EC)
Linux	+MCVSG (eH4c)	+MVSG -C (Java) +MVSG -C (eH4c + WB)	+MVSG -C (Java) +MVSG -C (eH4c + WB)	+MVS -CG (eH4c + WB) via WB only
Web Browser	+MCVSG	+MVSG -C (eH4c + WB)	+MVSG -C (eH4c + WB)	+MVSC -G (eH4c + WB)
Java Enabled Systems	+MVSG -C	+MVSG -C	+MVSG -C	-
Windows Mobile	-	+MVSG -C (.Net, .Net CF)	+MVSG -C (.Net, .Net CF)	+MVSC -G via WB only
Android	+MVSG -C (Java App)	+MVSG -C (Java App)	+MVSG -C (Java App)	+MVSC -G via WB only
Communication gateway to the Internet	not required	Required PC (RS232<=>485) + eHouse.exe, computer board, uC / for CM not required	Control not required / status of all controllers required LinuxBox + eH4C	Required (RS232<=>CAN) + linux Box + eH4C
Analog/Measurement Inputs ADC	-	RM (8), HM (16)	ERM (8)	EC (2)
ADC measurement Range	-	<0..5V>	<0..3.3V>	<0..5> or <0..3.3V>
Digital Outputs	128/(256)	RM (24)	ERM (24)	EC (4)
Single PWM dimmers	-	RM, EM, HM (3)	ERM (3)	EC (4)
RGB dimmers	-	RM (1)	ERM (1)	EC (1) + White
Build-In Power PWM MOSFET Dimmers Drivers	-	- , +	- , +	+
Power supply@ average current	5V/2A	7-12V@0.2A+Relays	6..12V/0.3A+Relays	7V..25V/0.21A..0.07A
Power supply type	Linear/Switch	Linear (Lin)	Lin/SW (Switch)/ Lin + SW	Lin / SW / SW + Lin
Relays	External	External (5V..12V) – DIN 230V/16A - single	External (5V..12V) – DIN 230V/16A - single	4 - Build-In (5V) 230V/5A or 2 - External Module (5V) 230V/20A
Output + Dimmers Programs	256	24	24	-
ADC Programs	-	together with outputs programs	12	-

Item / Architecture	PRO	RS485 supervision PC / CM	LAN	CAN (EC)
Scheduler	5000	248	128	-
RTC - synchronization	SNTP	Firmware - main host	Firmware - SNTP	Firmware - eH4c
Additional Interfaces	RS232,RS-485 (eHouse1), USB	RS232,SPI, I2C	RS232,SPI, I2C	RS232, SPI
Infrared Transmitter (IR)	-	+ 23 IR standards	+ 23 IR standards	+ 23 IR standards
Infrared Receiver (IR)	-	+ Sony SIRC standard 12,15,24b	+ Sony SIRC standard 12,15,24b	+ Sony SIRC standard 12,15,24b

9. Documentation / Do It Yourself – English Version

Most current documentation in English are located at producer home page:

http://home-automation.isys.pl/ehouse_doc,intelligent_house_building_doc.htm

Source code examples, templates, libraries: http://isys.pl/download/

Do It Yourself information: http://smart.ehouse.pro/ - **eHouse Blog**

Details DIY, Programming, Designing, Instalation, Configuration, Articles, tips & tricks:

http://smart.ehouse.pro/category/applications/ - eHouse applications

http://smart.ehouse.pro/category/boilerroom/ - Boiler Room & Central Heating

http://smart.ehouse.pro/category/building-management/ - Building Management General Info

http://smart.ehouse.pro/category/design/ - eHouse Design, solutions, demos

http://smart.ehouse.pro/category/ehouse4can/ - eHouse4CAN – Installation, Configuration

http://smart.ehouse.pro/category/ehouse-lan/ - eHouse Ethernet – Installation, Configuration

http://smart.ehouse.pro/category/ehouse-rs-485/ eHouse 1 – Installation, Configuration

http://smart.ehouse.pro/category/ehouse-pro/ - eHouse.PRO – Installation, Configuration

http://smart.ehouse.pro/category/renewableenergy/ - free and renewable energy usage

http://smart.ehouse.pro/category/general/ - eHouse general info

http://smart.ehouse.pro/category/integrationcontrol/ - Integration to other systems, devices, A/V

http://smart.ehouse.pro/category/openremote/ - Integration with OpenRemote.ORG

http://smart.ehouse.pro/category/os/linux/ - Linux programming for eHouse - „C”

http://smart.ehouse.pro/category/os/windows/ - Windows programming

http://smart.ehouse.pro/category/programming/android/ - Mobile Devices PADs, SmartPhone, SmartTV, Android programming , screenshoots for eHouse

http://smart.ehouse.pro/category/programming/apache/ - Apache integration to eHouse.PRO server

http://smart.ehouse.pro/category/programming/csharp/ - C#, .Net, .Net CF programming

http://smart.ehouse.pro/category/programming/c/ - C programming for Linux

http://smart.ehouse.pro/category/programming/delphi/ - Delphi, Pascal programming for Windows

http://smart.ehouse.pro/category/programming/java/ - Multiplatform Java programming, screenshoots

http://smart.ehouse.pro/category/programming/windows-phone/ - Windows Mobile, Phone programming

http://smart.ehouse.pro/category/programming/www/ - Web browser support for eHouse

http://smart.ehouse.pro/category/visualization/ - Creating individual visualization and graphical control views

10. Contact and Cooperation

iSys – Intelligent Systems
Wygoda 14, 05-480 Karczew
Poland
tel: +48504057165
email: is@isys.pl

GPS: (N:52 st 2min 44.3s; E:21st 15min 49.19s)

Map

Producer, manufacturer, developer home page in English:

http://home-automation.isys.pl/ - Producer homepage
http://smart.ehouse.pro/ - Do It Yourself, designing, development, examples, applications
http://eHouse.Biz/ - eHouse smart home producer online shop

http://www.isys.pl/?home_automation - Other Languages (for information only not for reference)

Serwisy eHouse w języku polskim:

http://inteligentny-dom.ehouse.pro/ Zrób to sam, programowanie, przykłady, projektowanie, zastosowania
http://www.isys.pl/ - strona WWW producenta
http://ehouse.net.pl/ - sklep internetowy producenta inteligentnego domu eHouse
http://www.ehouse.pro/ - Automatyka domu, budynku, hoteli, pensionatów
http://sterowanie.biz/ - Sterowanie domem, budynkiem, mieszkaniem

11. Notes: